CYD ESP32-2432S028 PINOUT

Pinout reference · ESP32

GPIO · safe · use with care · serial, USB · PWM capable

ADC · touch / DAC · RTC · 32 kHz crystal · SPI · JTAG · UART · strapping · on-board feature · power · ground · EN / reset

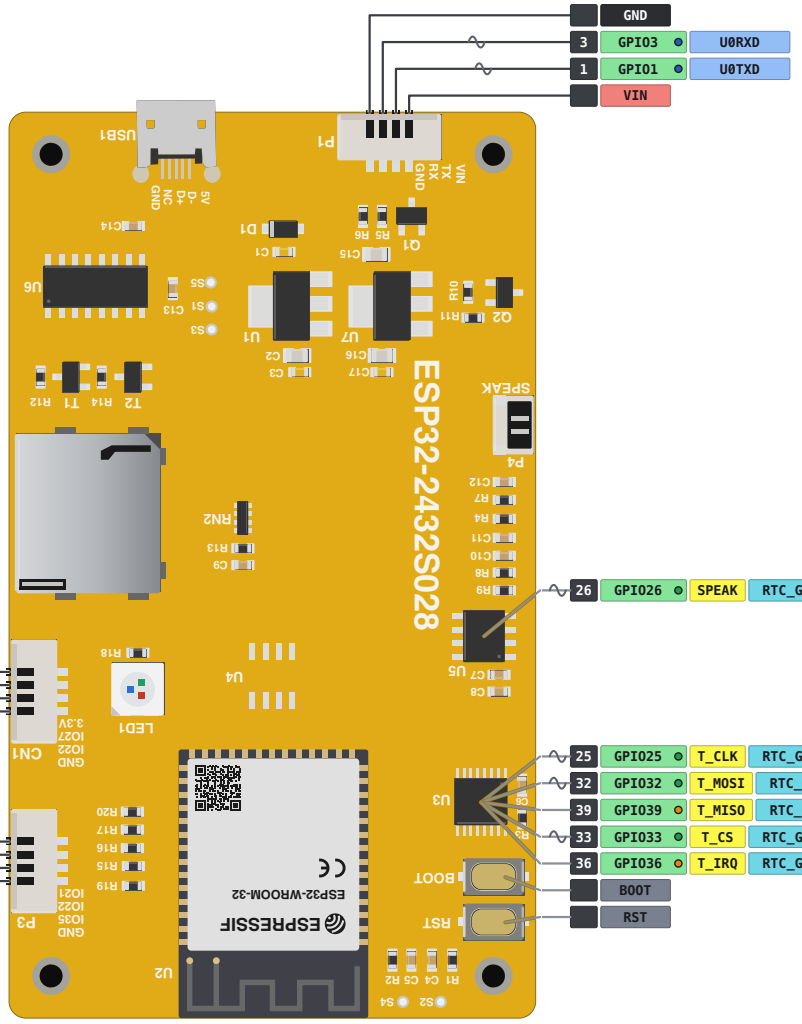

Display (ILI9341, HSPI)

TOUCH6	ADC2_CH6	MTMS	HSPICLK	RTC_GPIO16	TFT_SCK	GPIO14 (14)
TOUCH4	ADC2_CH4	MTCK	HSPID	RTC_GPIO14	TFT_MOSI	GPIO13 (13)
MTDI	TOUCH5	ADC2_CH5	HSPIQ	RTC_GPIO15	TFT_MISO	GPIO12 (12)
MTDO	TOUCH3	ADC2_CH3	HSPICS0	RTC_GPIO13	TFT_CS	GPIO15 (15)
BOOT	TOUCH2	ADC2_CH2	HSPIWP	RTC_GPIO12	TFT_DC	GPIO2 (2)

microSD card (VSPI)

VSPICLK	SD_CLK	GPIO18	18
VSPID	SD_MOSI	GPIO23	23
VSPIQ	SD_MISO	GPIO19	19
SDIO timing VSPICS0	SD_CS	GPIO5	5

RGB LED (common anode)

LED	TOUCH0	ADC2_CH0	HSPIHD	RTC_GPIO10	LED_R	GPIO4	4
LED				U2RXD	LED_G	GPIO16	16
LED				U2TXD	LED_B	GPIO17	17

3V3				
TOUCH7	ADC2_CH7	RTC_GPIO17	GPIO27	27
		VSPIWP	GPIO22	22
GND				

backlight		VSPIHD	GPIO21	21
		VSPIWP	GPIO22	22
input-only	ADC1_CH7	RTC_GPIO5	GPIO35	35
GND				

GND				
3	GPIO3	U0RXD		
1	GPIO1	U0TXD		
VIN				

26	GPIO26	SPEAK	RTC_GPIO7	ADC2_CH9	DAC_2
25	GPIO25	T_CLK	RTC_GPIO6	ADC2_CH8	DAC_1
32	GPIO32	T_MOSI	RTC_GPIO9	32K_XP	ADC1_CH4 TOUCH9
39	GPIO39	T_MISO	RTC_GPIO3	ADC1_CH3	input-only
33	GPIO33	T_CS	RTC_GPIO8	32K_XN	ADC1_CH5 TOUCH8
36	GPIO36	T_IRQ	RTC_GPIO0	ADC1_CH0	input-only
BOOT					
RST					

Pin functions from the ESP32 Series Datasheet v5.3. Strapping pins per Espressif.

© 2026 espboards.dev · CC BY-NC 4.0

ESPboards
espboards.dev/esp32/cyd-esp32-2432s028