Heltec WiFi Kit 32 PINOUT

Pinout reference · ESP32

GPIO · safe · use with care · serial, USB · PWM capable

ADC · touch / DAC · RTC · 32 kHz crystal · SPI · JTAG · UART · strapping · on-board feature · default function

power · ground · EN / reset

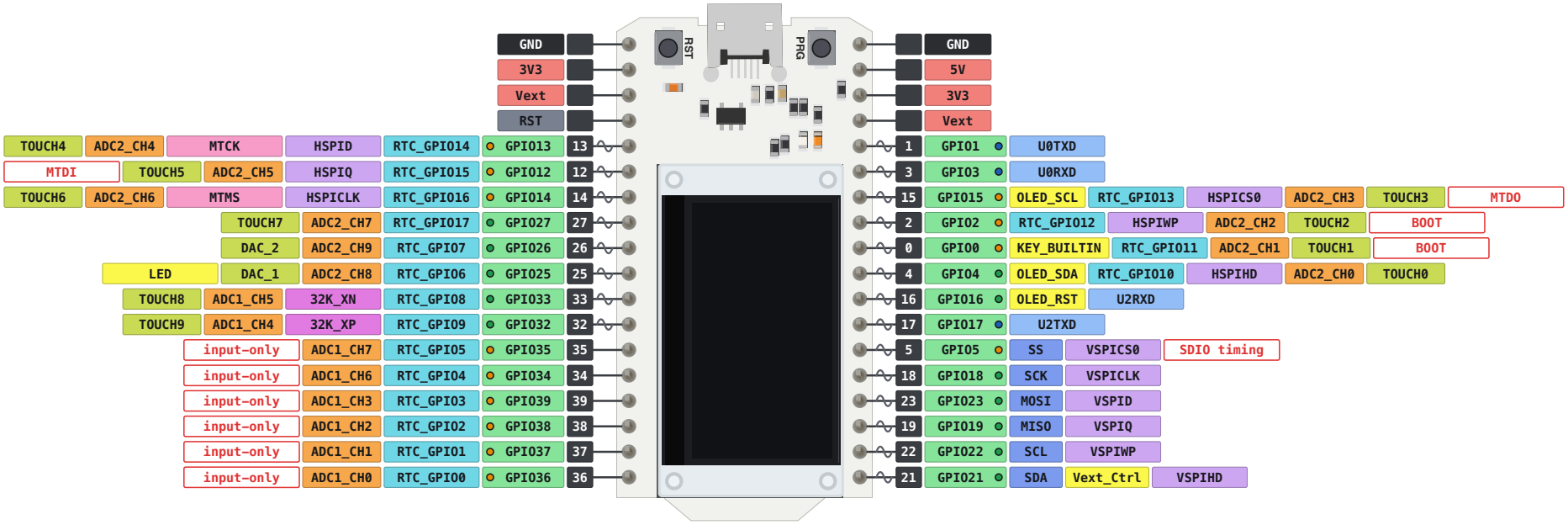

Pin functions from the ESP32 Series Datasheet v5.3. Strapping pins per Espressif.

© 2026 espboards.dev · CC BY-NC 4.0

ESPboards

espboards.dev/esp32/heltec-wifi-kit-32