Heltec Wireless Shell (V3) PINOUT

Pinout reference · ESP32-S3

GPIO · safe · use with care · serial, USB · PWM capable

ADC · touch · RTC · 32 kHz crystal · SPI · JTAG · UART / USB

strapping · on-board feature · power · ground · EN / reset

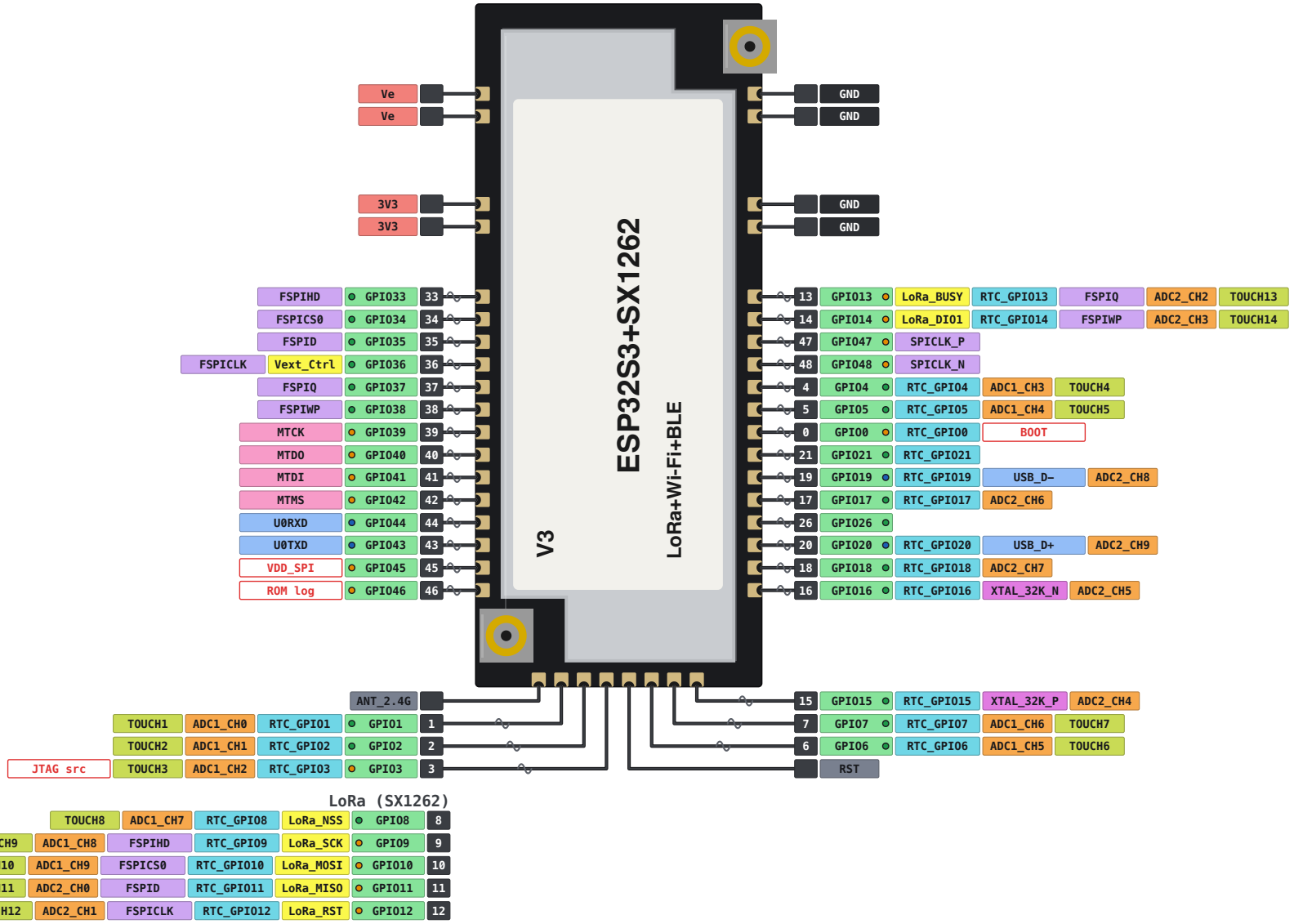

Pin functions from the ESP32-S3 Series Datasheet v2.2. Strapping pins per Espressif.

© 2026 espboards.dev · CC BY-NC 4.0

ESPboards

espboards.dev/esp32/heltec-wireless-shell-v3