Waveshare ESP32-S3 ePaper 1.54G PINOUT

Pinout reference · ESP32-S3

GPIO · safe · use with care · serial, USB · PWM capable

ADC · touch · RTC · 32 kHz crystal · SPI · JTAG · UART / USB · strapping · on-board feature · default function · power · ground

e-Paper (SPI)

TOUCH12	ADC2_CH1	FSPICLK	RTC_GPIO12	EPD_SCK	GPIO12	12
TOUCH13	ADC2_CH2	FSPIQ	RTC_GPIO13	EPD_MOSI	GPIO13	13
TOUCH11	ADC2_CH0	FSPID	RTC_GPIO11	EPD_CS	GPIO11	11
TOUCH10	ADC1_CH9	FSPICS0	RTC_GPIO10	EPD_DC	GPIO10	10
TOUCH9	ADC1_CH8	FSPIHD	RTC_GPIO9	EPD_RST	GPIO9	9
TOUCH8	ADC1_CH7	RTC_GPIO8	EPD_BUSY	GPIO8	8	
TOUCH6	ADC1_CH5	RTC_GPIO6	EPD_PWR	GPIO6	6	

Power and RTC

TOUCH4	ADC1_CH3	RTC_GPIO4	BAT_ADC	GPIO4	4
ADC2_CH6	RTC_GPIO17	PWR_HOLD	GPIO17	17	
TOUCH5	ADC1_CH4	RTC_GPIO5	RTC_INT	GPIO5	5

microSD (1-bit SDMMC)

MTCK	SD_CLK	GPIO39	39
MTDI	SD_CMD	GPIO41	41
MTDO	SD_D0	GPIO40	40

outer header row

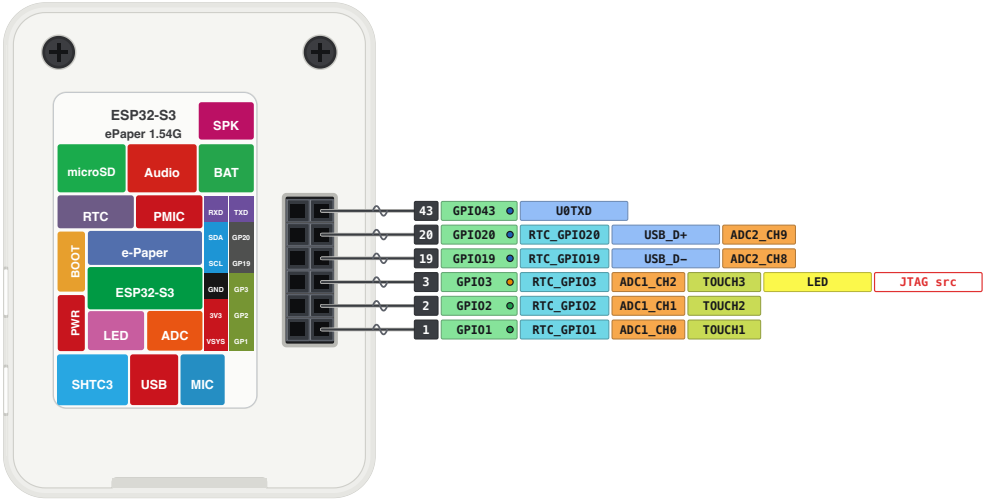

Audio (ES8311)

TOUCH14	ADC2_CH3	FSPIWP	RTC_GPIO14	I2S_MCLK	GPIO14	14
ADC2_CH4	XTAL_32K_P	RTC_GPIO15	I2S_BCLK	GPIO15	15	
FSPIWP	I2S_WS	GPIO38	38			
ADC2_CH5	XTAL_32K_N	RTC_GPIO16	I2S_DIN	GPIO16	16	
VDD_SPI	I2S_DOUT	GPIO45	45			
ROM log	PA_CTRL	GPIO46	46			
MTMS	AUDIO_PWR	GPIO42	42			

Buttons (left wall)

BOOT	RTC_GPIO0	GPIO0	0
ADC2_CH7	RTC_GPIO18	PWR	GPIO18	18

Touch connector (reserved)

TOUCH7	ADC1_CH6	RTC_GPIO7	TP_RST	GPIO7	7
RTC_GPIO21	TP_INT	GPIO21	21		

inner header row

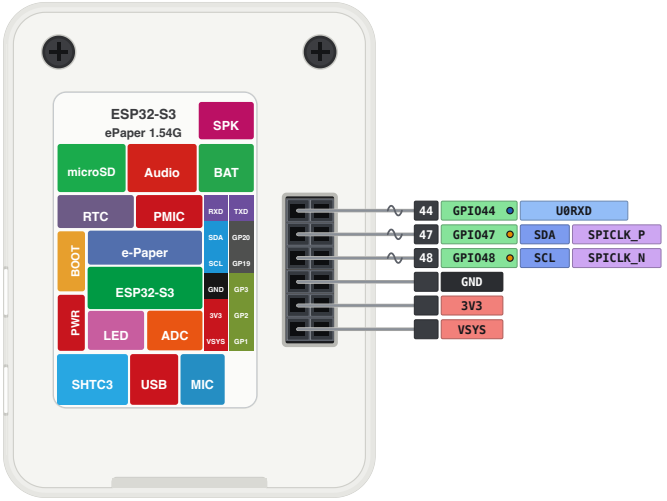

Pin functions from the ESP32-S3 Series Datasheet v2.2. Strapping pins per Espressif.

© 2026 espboards.dev · CC BY-NC 4.0

ESPboards

espboards.dev/esp32/waveshare-esp32-s3-epaper-1-54g